Please check the examination details below before entering your candidate information

Candidate surname	Other names

Centre Number | Candidate Number

Pearson Edexcel Level 1/Level 2 GCSE (9–1)

Tuesday 18 June 2024

Morning (Time: 1 hour 45 minutes)

Paper reference **1DT0/1F**

Design and Technology

COMPONENT 1: Timbers

You must have:
Calculator, ruler, HB pencil, protractor, pair of compasses

Total Marks

Instructions

- Use **black** ink or ball-point pen.
- **Fill in the boxes** at the top of this page with your name, centre number and candidate number.
- Answer **all** questions.
- Answer the questions in the spaces provided – *there may be more space than you need.*
- Calculators may be used.
- Any diagrams may NOT be accurately drawn, unless otherwise indicated.
- You must **show all your working out** with **your answer clearly identified** at the **end of your solution**.

Information

- The total mark for this paper is 100.
- The marks for **each** question are shown in brackets – *use this as a guide as to how much time to spend on each question.*

Advice

- Read each question carefully before you start to answer it.
- Try to answer every question.
- Check your answers if you have time at the end.

Turn over

©2024 Pearson Education Ltd.
F:1/1/1/1/1/1

P 7 5 5 3 2 A 0 1 2 8

Pearson

SECTION A

Core

Answer ALL questions. Write your answers in the spaces provided.

1 (a) The materials that products are made from are chosen because of their properties.

Figure 1 shows a table of products.

For each of the products shown, give a property of the material it is made from that makes the material suitable for the product.

The first one has been done for you.

Picture of product	Material and product	Property
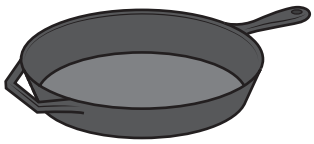	Cast iron frying pan	Hard
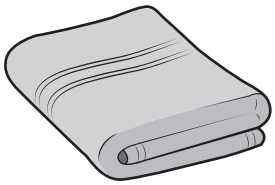	Cotton bath towel	**(1)** (i) .....
	Polyester resin earrings	**(1)** (ii) .....
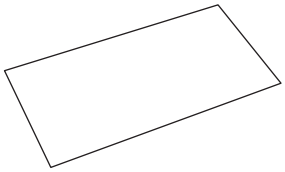	Copier paper	**(1)** (iii) .....
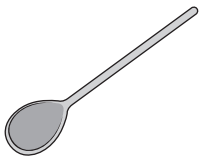	Beech cooking spoon	**(1)** (iv) .....

Figure 1

DO NOT WRITE IN THIS AREA
DO NOT WRITE IN THIS AREA
DO NOT WRITE IN THIS AREA

(b) (i) The frying pan is made from cast iron. Cast iron is hard, therefore it does not scratch easily.

Explain **one other** advantage of using cast iron for the frying pan.

(2)

.....

.....

.....

.....

(ii) Cast iron contains 2% carbon.

The cast iron frying pan weighs 3 kg.

Calculate how many grams of carbon are in the cast iron frying pan.

(2)

Answer ..... grams

(Total for Question 1 = 8 marks)

DO NOT WRITE IN THIS AREA
DO NOT WRITE IN THIS AREA
DO NOT WRITE IN THIS AREA

2 Figure 2 shows a wooden sheep that is being threaded with a yarn.

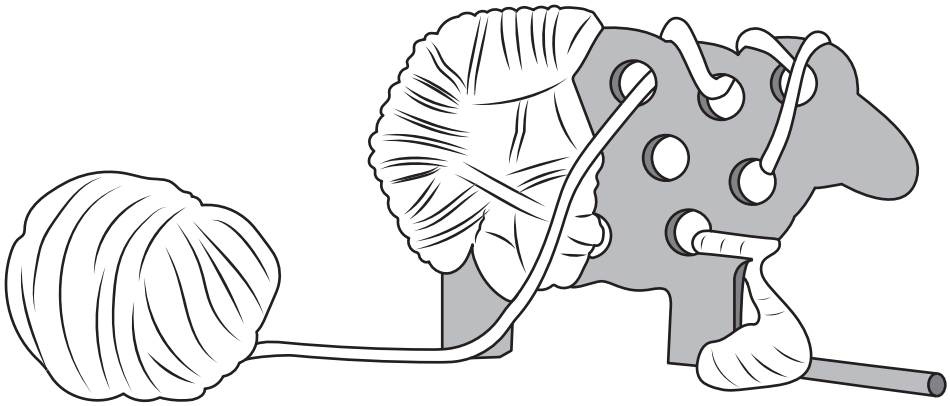

Figure 2

(a) Name **one** specific animal fibre that can be used to make the yarn being threaded in Figure 2.

(1)

.....

The wood that is used to manufacture the sheep is delivered to the manufacturer using vehicles powered by biofuels.

(b) Explain **one** advantage of using biofuels to power the delivery vehicles.

(2)

.....

.....

.....

.....

(c) Explain **one** advantage of using computer-aided design (CAD) when producing the design ideas for the wooden sheep.

(2)

.....

.....

.....

.....

DO NOT WRITE IN THIS AREA
DO NOT WRITE IN THIS AREA
DO NOT WRITE IN THIS AREA

A new animal shape needs to be designed.

The designer has collected some data about the popularity of specific animals amongst young children.

Figure 3 is a table of data showing the popularity of specific animals amongst young children.

Animal	Number of votes	Percentage of votes (%)
Cat	165	55
Dog	75	25
Rabbit	.....	15
Mouse	.....	5
Total	300	100

Figure 3

(d) (i) Complete Figure 3 above by calculating the **two** missing values.

(2)

Space for working

Number of votes for Rabbit .....

Number of votes for Mouse .....

DO NOT WRITE IN THIS AREA
DO NOT WRITE IN THIS AREA
DO NOT WRITE IN THIS AREA

Figure 4 is a partly completed bar chart that shows the percentage of votes received for the Cat and the Dog.

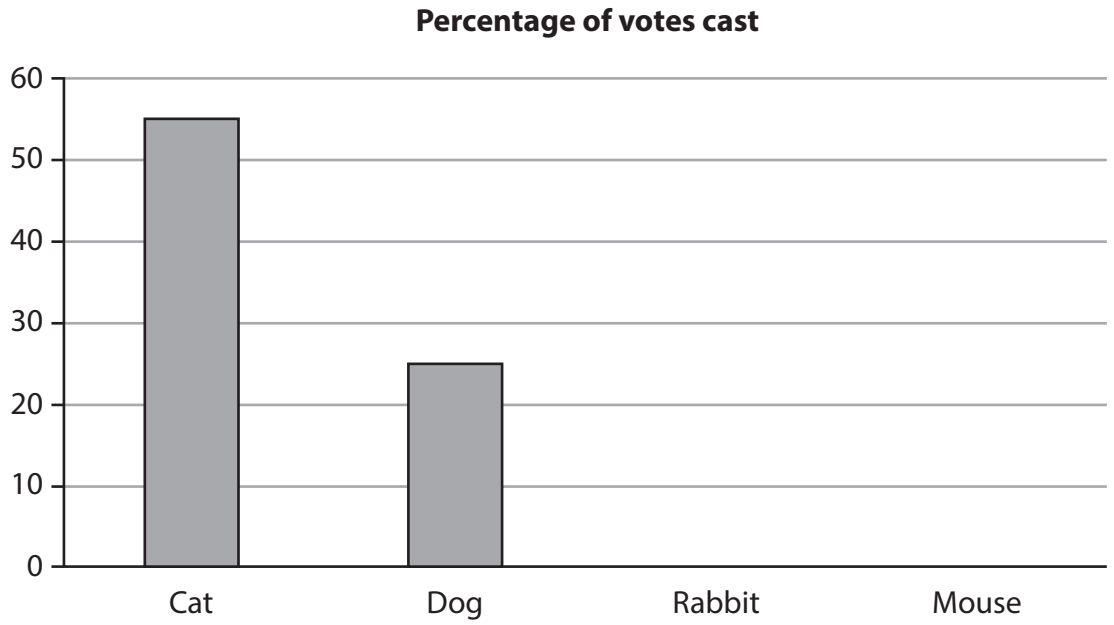

Figure 4

(ii) Complete the bar chart shown in Figure 4 to show the percentage of votes received for the Rabbit and the Mouse.

(2)

(Total for Question 2 = 9 marks)

DO NOT WRITE IN THIS AREA
DO NOT WRITE IN THIS AREA
DO NOT WRITE IN THIS AREA

DO NOT WRITE IN THIS AREA
DO NOT WRITE IN THIS AREA
DO NOT WRITE IN THIS AREA

3 Figure 5 shows a pulley and pulley belt, a motor, and the cross section of the pulley belt used in a model boat drive system.

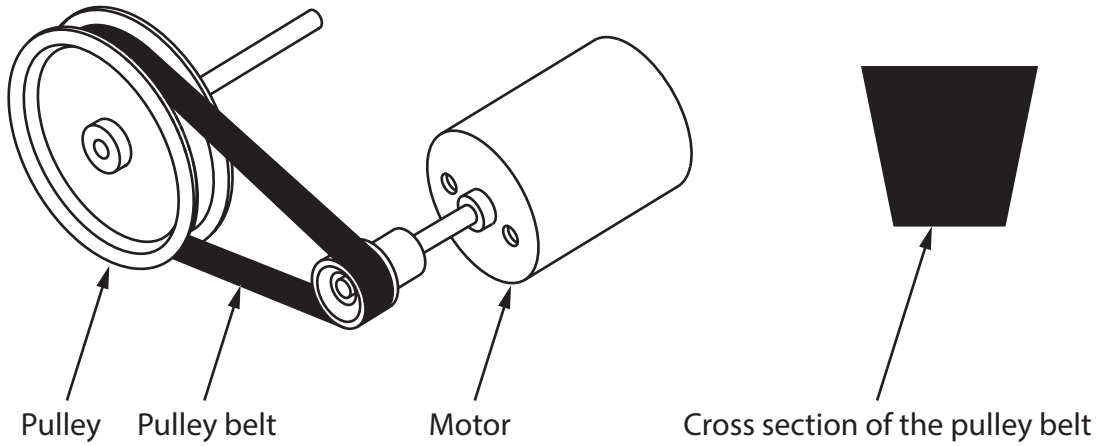

Figure 5

(a) Name the type of pulley belt shown in the cross section in Figure 5.

(1)

.....

(b) Explain **one** reason for manufacturing the pulley from aluminium rather than mild steel.

(2)

.....

.....

.....

.....

Figure 6 shows the pulley system for the model boat drive system.

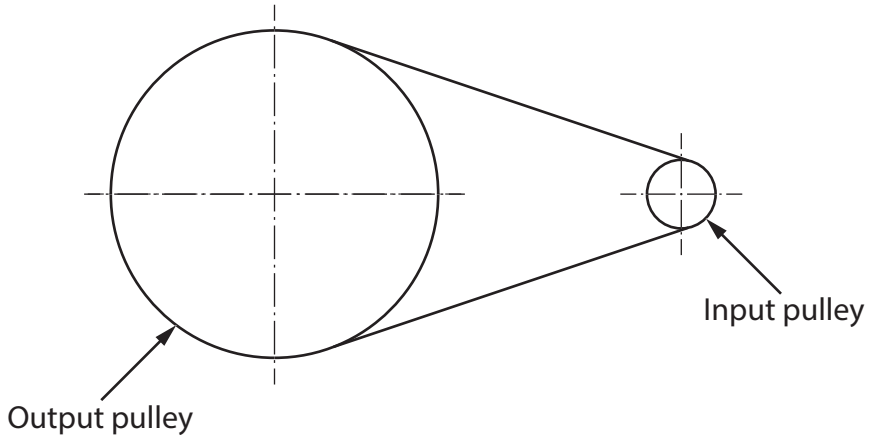

Figure 6

(c) The pulley system has a velocity ratio of 5:1.

The input speed is 2000 revolutions per minute (rpm).

Calculate the output speed of the pulley system.

Use the formula below to calculate the answer.

$$\text{Velocity ratio} = \frac{\text{input speed}}{\text{output speed}}$$

Give your answer in rpm.

(2)

Answer ..... rpm

DO NOT WRITE IN THIS AREA
DO NOT WRITE IN THIS AREA
DO NOT WRITE IN THIS AREA

The motor for the model boat is powered by the solar cell shown in Figure 7.

The solar cell is 5 cm by 5 cm.

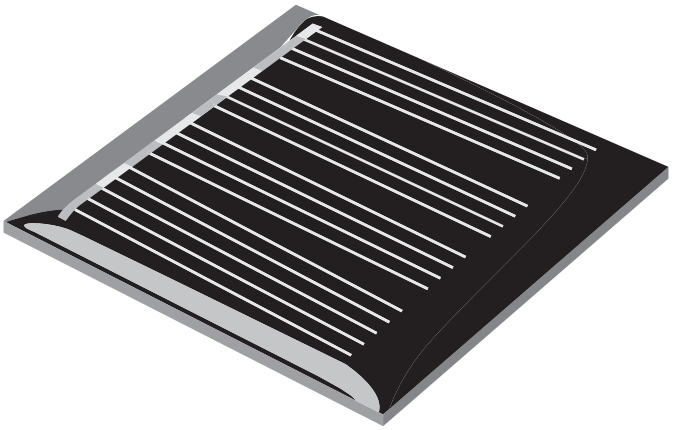

Figure 7

(d) Explain **one** disadvantage of using the solar cell to power the motor for the model boat.

(2)

.....

.....

.....

.....

DO NOT WRITE IN THIS AREA
DO NOT WRITE IN THIS AREA
DO NOT WRITE IN THIS AREA

Figure 8 shows the frame for the model boat.

The model boat has been manufactured from balsa wood.

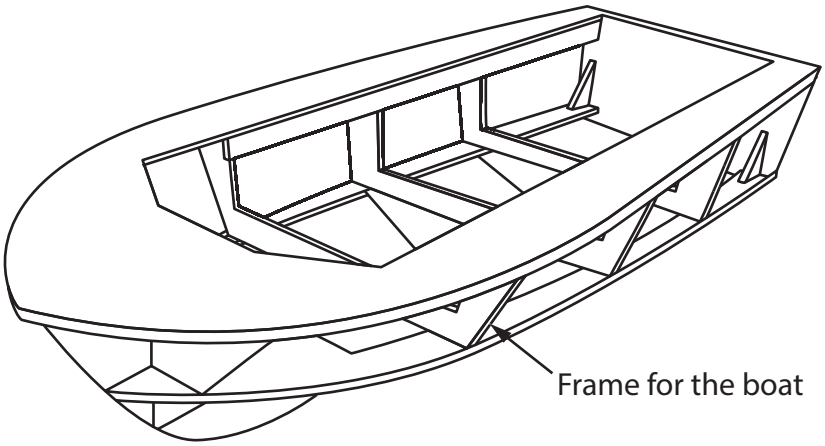

Figure 8

(e) Explain **two** benefits of using balsa wood for the frame of the model boat.

(4)

1 .....

.....

.....

.....

2 .....

.....

.....

.....

(Total for Question 3 = 11 marks)

DO NOT WRITE IN THIS AREA
DO NOT WRITE IN THIS AREA
DO NOT WRITE IN THIS AREA

4 (a) Explain **two** ways that conductive inks can be used in products.

(4)

1 .....

.....

.....

.....

2 .....

.....

.....

.....

(b) A small batch of conductive ink weighs 9 grams.

The ink contains 40% of hazardous material by weight.

Calculate the weight of hazardous material present in the ink in grams.

(2)

Answer ..... grams

DO NOT WRITE IN THIS AREA
DO NOT WRITE IN THIS AREA
DO NOT WRITE IN THIS AREA

(c) Discuss how designers can minimise the environmental impact of materials when developing new and emerging technologies.

(6)

DO NOT WRITE IN THIS AREA
DO NOT WRITE IN THIS AREA
DO NOT WRITE IN THIS AREA

DO NOT WRITE IN THIS AREA
DO NOT WRITE IN THIS AREA
DO NOT WRITE IN THIS AREA

(Total for Question 4 = 12 marks)

TOTAL FOR SECTION A = 40 MARKS

SECTION B

Timbers

Answer ALL questions. Write your answers in the spaces provided.

5 Figure 9 shows a design solution for a chisel rack to hold three chisels, together with some additional information.

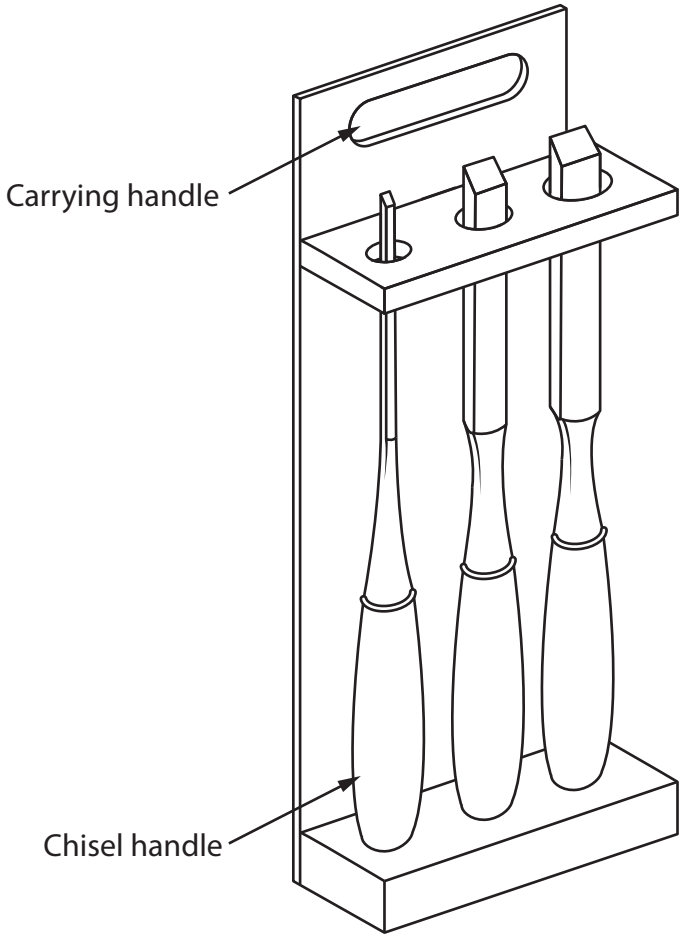

Additional information – dimensions of chisels

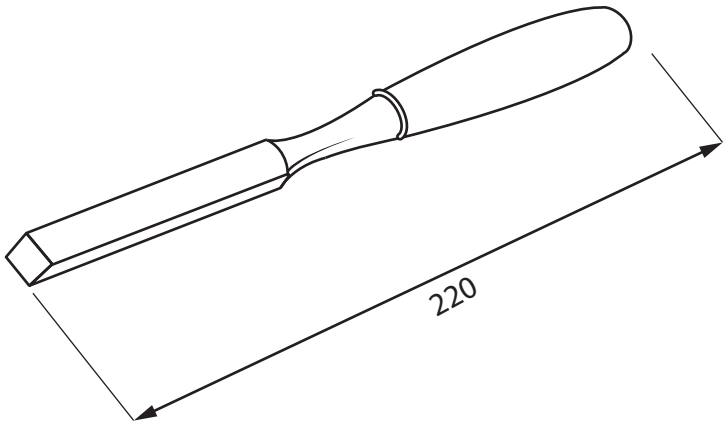

All dimensions in mm

Diagram not to scale

Figure 9

DO NOT WRITE IN THIS AREA
DO NOT WRITE IN THIS AREA
DO NOT WRITE IN THIS AREA

(a) The chisel rack holds three chisels and needs to be improved to include the following specification points.

The chisel rack must:

- be able to hold an additional three chisels and stop the handles of the chisels from moving as the rack is carried around a workshop
- protect the user from potential cuts when carrying the rack and have a surface finish that is easy to clean
- be more stable when placed on a bench and be capable of being hung up on a wall.

Use notes and sketches to show how the chisel rack could be modified to include these three specification points.

You will be marked on how you apply your understanding of design and technology, not your graphical skills.

Use the outline of the original design solution to show your modifications.

(6)

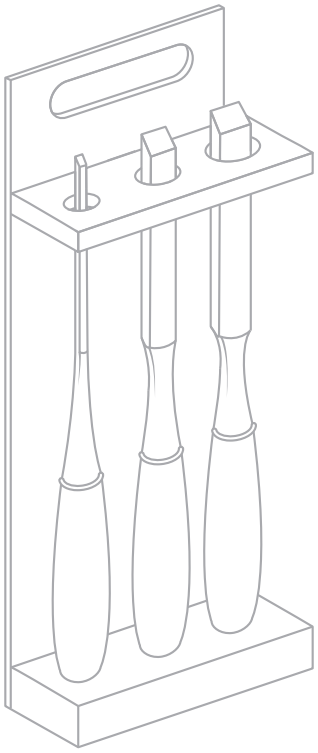

DO NOT WRITE IN THIS AREA
DO NOT WRITE IN THIS AREA
DO NOT WRITE IN THIS AREA

(b) Figure 10 shows a food play set manufactured from wood.

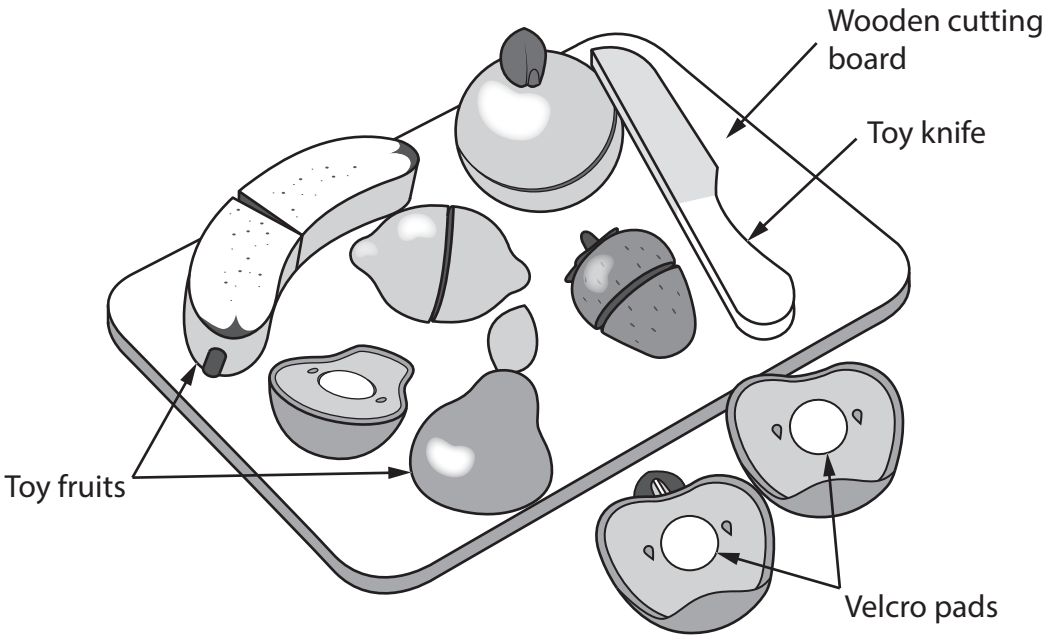

Figure 10

Explain **two** ways that the wooden food play set meets, or fails to meet, the criterion of providing a method to educate young children about healthy eating.

(4)

1 .....

.....

.....

.....

2 .....

.....

.....

.....

(Total for Question 5 = 10 marks)

DO NOT WRITE IN THIS AREA
DO NOT WRITE IN THIS AREA
DO NOT WRITE IN THIS AREA

6 Figure 11 shows a battery-powered candle and a wooden house.

The candle sits inside the hole in the wooden house.

The main body of the house has been manufactured from birch and the roof has been manufactured from mahogany.

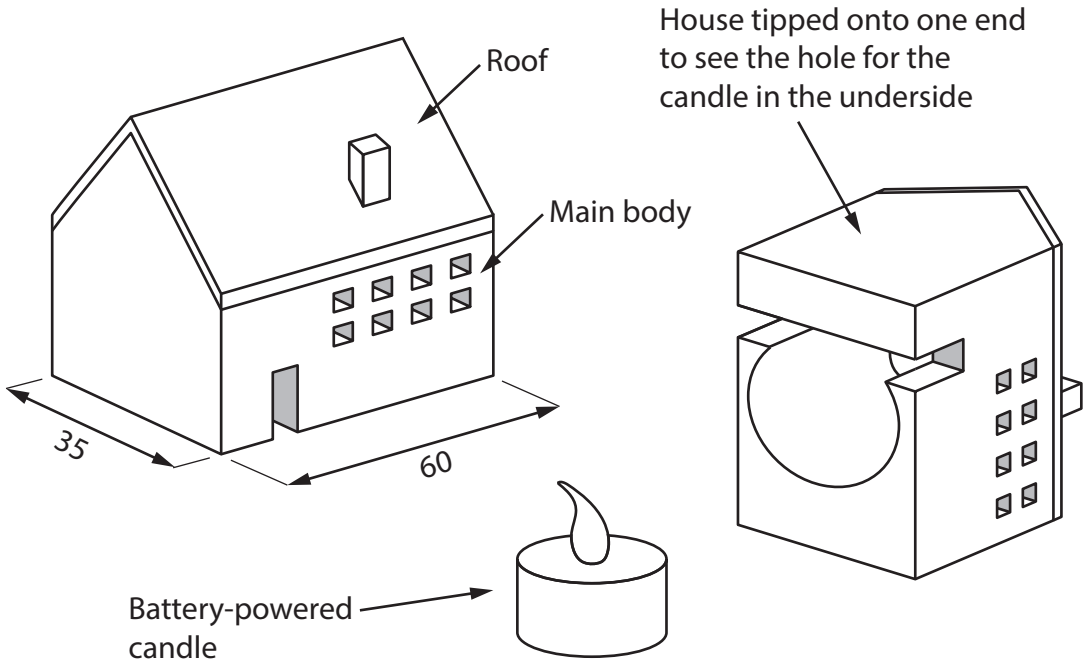

All dimensions in mm

Diagram not to scale

Figure 11

The wooden house has been finished with shellac.

(a) Explain **two** reasons for finishing the wooden house with shellac.

(4)

1 .....

.....

.....

.....

2 .....

.....

.....

.....

DO NOT WRITE IN THIS AREA
DO NOT WRITE IN THIS AREA
DO NOT WRITE IN THIS AREA

(b) Figure 12 shows a dimensioned drawing of a marked-out piece of timber ready to be cut to the correct length of 60 mm to start making the wooden house.

The timber has a cross section that measures 50 mm × 35 mm.

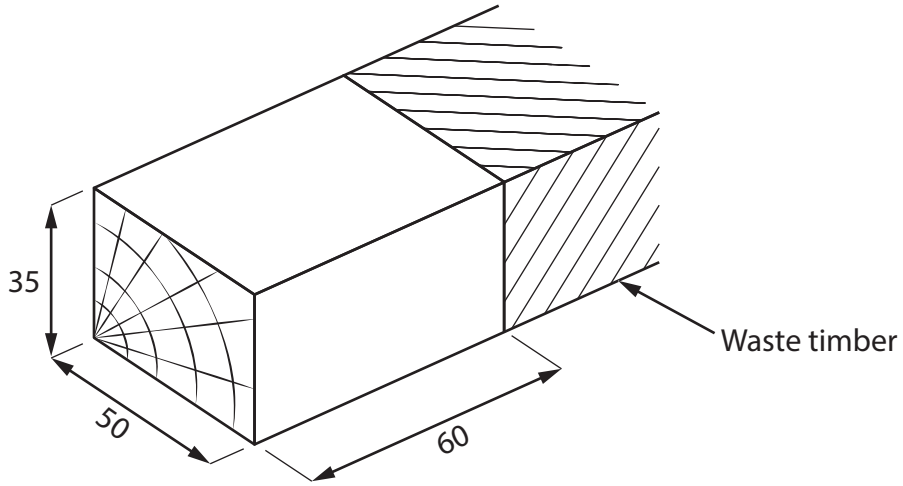

All dimensions in mm

Diagram not to scale

Figure 12

Use notes and sketches, in the space below, to show how the timber would be cut to the correct length using hand tools.

You will be marked on how you apply your understanding of design and technology, not your graphical skills.

(4)

DO NOT WRITE IN THIS AREA
DO NOT WRITE IN THIS AREA
DO NOT WRITE IN THIS AREA

(c) Explain **one** physical characteristic of birch that makes it an ideal material for the main body of the house.

(2)

.....

.....

.....

.....

DO NOT WRITE IN THIS AREA
DO NOT WRITE IN THIS AREA
DO NOT WRITE IN THIS AREA

Figure 13 shows a dimensioned side view of the main body of the wooden house.

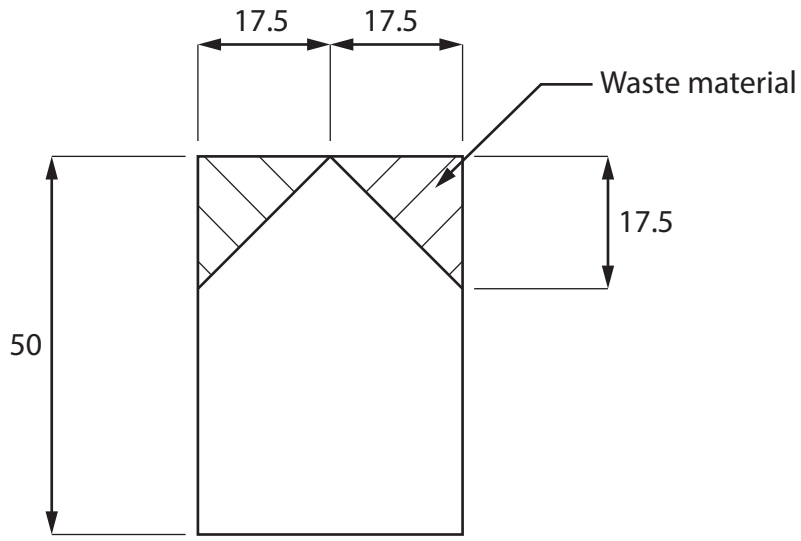

All dimensions in mm

Diagram not to scale

Figure 13

(d) Give **two** different manufacturing methods that could be used to remove the waste material to form the roof shape as shown in Figure 13.

Explain **one** reason for using each manufacturing method.

(6)

Method 1

.....

Explanation

.....

.....

.....

Method 2

.....

Explanation

.....

.....

.....

(Total for Question 6 = 16 marks)

DO NOT WRITE IN THIS AREA
DO NOT WRITE IN THIS AREA
DO NOT WRITE IN THIS AREA

DO NOT WRITE IN THIS AREA
DO NOT WRITE IN THIS AREA
DO NOT WRITE IN THIS AREA

7 Figure 14 shows a child's ride-on buggy.

The curved seat has been manufactured from plywood.

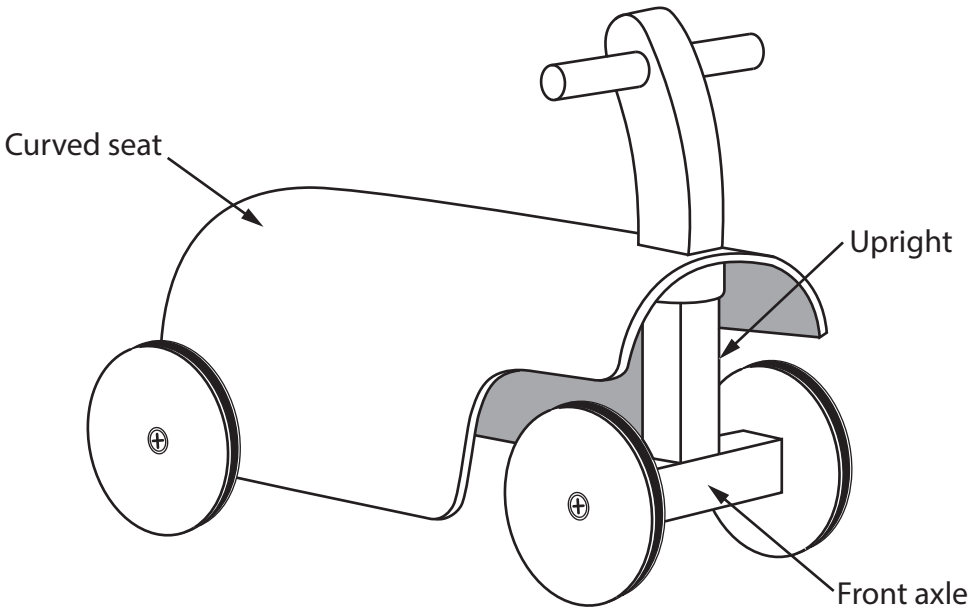

Figure 14

(a) Name the specific process that has been used to manufacture the curved seat shown in Figure 14.

(1)

.....

(b) Explain **two** working properties of plywood that make it an ideal material for the curved seat.

(4)

1 .....

.....

.....

.....

2 .....

.....

.....

.....

Figure 15 shows a dimensioned drawing of one of the plywood sheets for the curved seat before it is cut into shape.

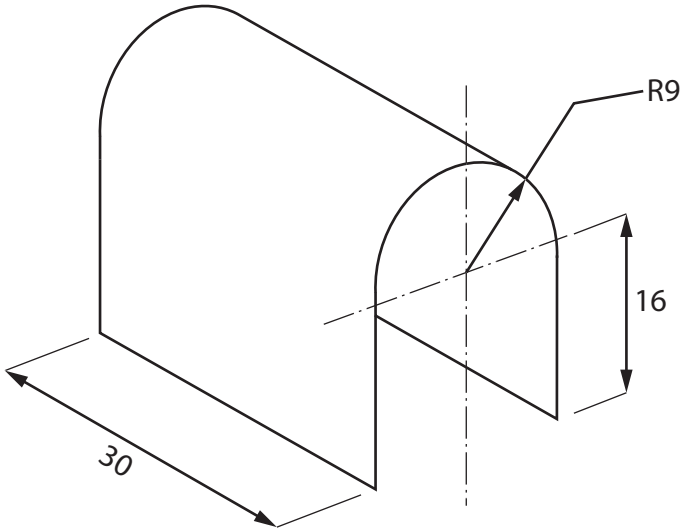

All dimensions in cm

Diagram not to scale

Figure 15

Circumference of a circle = πD

Use π = 3.142

(c) Calculate how many of the plywood sheets shown in Figure 15 can be cut from a large flat sheet of plywood that measures 244 cm × 122 cm.

Ignore the width of any saw cuts.

(5)

Answer .....

DO NOT WRITE IN THIS AREA
DO NOT WRITE IN THIS AREA
DO NOT WRITE IN THIS AREA

(d) Figure 16 shows an exploded view of the mortise and tenon joint that has been used to join the upright to the front axle.

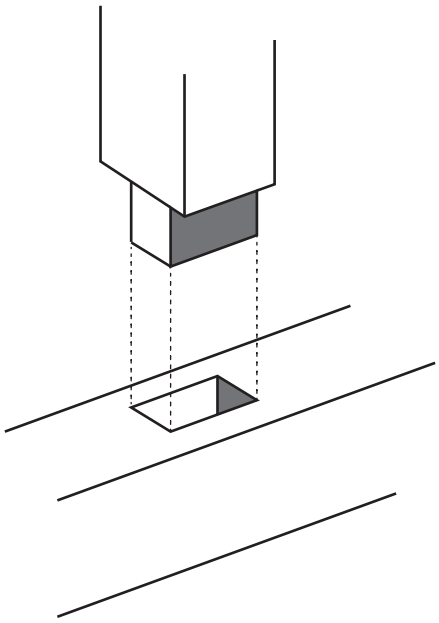

Figure 16

Explain **two** benefits of using a mortise and tenon joint to join the upright to the front axle.

(6)

1 .....

.....

.....

.....

.....

.....

2 .....

.....

.....

.....

.....

.....

(Total for Question 7 = 16 marks)

DO NOT WRITE IN THIS AREA
DO NOT WRITE IN THIS AREA
DO NOT WRITE IN THIS AREA

8 Figure 17 shows a partly exploded drawing of a medium density fibreboard (MDF) kitchen cupboard door.

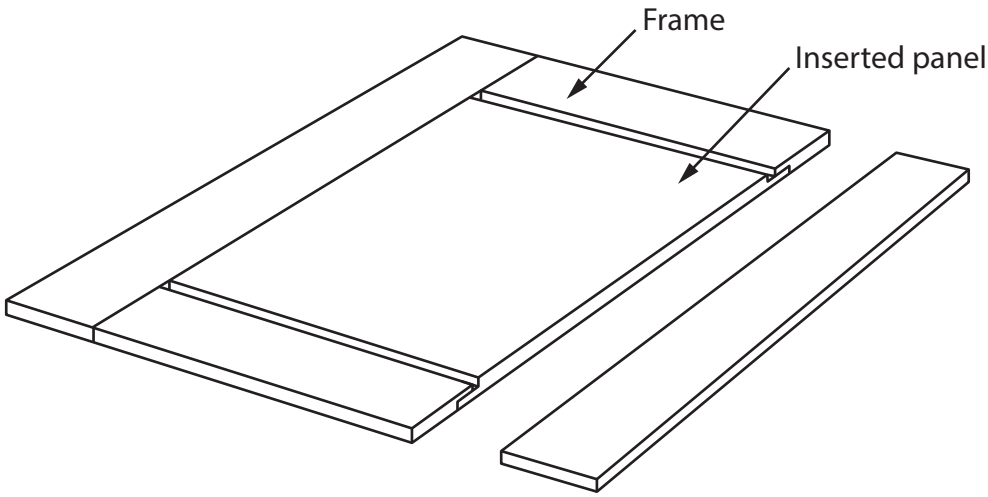

Figure 17

Manufacturing kitchen cupboard doors from MDF is cost effective.

(a) Explain **one other** benefit of manufacturing the kitchen cupboard doors from MDF.

(2)

.....

.....

.....

.....

(b) Explain **one** advantage of using a regular section size material for the frames of the kitchen cupboard doors.

(3)

.....

.....

.....

.....

DO NOT WRITE IN THIS AREA
DO NOT WRITE IN THIS AREA
DO NOT WRITE IN THIS AREA

(c) Explain **two** ways that jigs can be used to aid the manufacture of the kitchen cupboard doors.

(4)

1 .....

.....

.....

.....

2 .....

.....

.....

.....

DO NOT WRITE IN THIS AREA
DO NOT WRITE IN THIS AREA
DO NOT WRITE IN THIS AREA

(d) The kitchen cupboard doors are manufactured in the United Kingdom and sold around the world.

Figure 18 shows some additional information about the kitchen cupboard doors.

Source of MDF	USA
Country of manufacture	United Kingdom
Potential market	Houses, restaurants and hotels
Scale of production	Batch

Figure 18

Analyse the information in Figure 18.

Evaluate the kitchen cupboard doors with reference to cost factors including:

- quality of material
- manufacturing processes necessary
- treatments.

(9)

.....

.....

.....

.....

.....

.....

.....

.....

.....

.....

.....

.....

.....

DO NOT WRITE IN THIS AREA DO NOT WRITE IN THIS AREA DO NOT WRITE IN THIS AREA

DO NOT WRITE IN THIS AREA
DO NOT WRITE IN THIS AREA
DO NOT WRITE IN THIS AREA

(Total for Question 8 = 18 marks)

TOTAL FOR SECTION B = 60 MARKS
TOTAL FOR PAPER = 100 MARKS

BLANK PAGE

DO NOT WRITE IN THIS AREA
DO NOT WRITE IN THIS AREA
DO NOT WRITE IN THIS AREA